Short-time magnetization in superconducting thin films

H. Ferrari, S.O. Valenzuela, and V. Bekeris
Laboratorio de Bajas Temperaturas, Facultad de Ciencias Exactas y Naturales, Universidad Nacional de Buenos Aires Argentina

J. Guimpel and F. de la Cruz
Centro Atómico Bariloche and Instituto Balseiro Comisión Nacional de Energía Atómica 8400 San Carlos de Bariloche, R.N., Argentina

Recibido el 10 de enero de 1998; aceptado el 6 de marzo de 1998

We have investigated the magnetization in thin (Y;Gd)$Ba_2Cu_3O_{7-\delta}$ superconducting films in the 100 μs time scale. Magnetic moment was measured with a non-conventional technique that combines the use of a pulsed magnetic field and a synchronized pulsed laser. Both virgin and magnetically cycled samples were examined and results are described within Bean's critical state model.

Keywords: dc-magnetization; short-time; high T_c superconductors; thin films

Hemos investigado la magnetización dc de películas delgadas superconductoras de (Y;Gd)$Ba_2Cu_3O_{7-\delta}$) en la escala temporal de 100 μs. El momento magnético en función del campo aplicado fue medido con una técnica no convencional que combina el uso de un campo magnético pulsado y un láser pulsado sincronizado. Se examinaron tanto muestras vírgenes comomagnéticamente cicladas, y los resultados se describen muy satisfactoriamente en el marco del modelo de estado crítico de Bean para un disco en un campo magnético transversal.

Descriptores: magnetización dc; tiempos cortos; superconductividad de alta T_c; películas delgadas

PACS: 74.60.Ge; 74.60.Jg; 74.76.Bz

1. Introduction

The current and field distribution in thin superconducting films in transverse magnetic fields has been an area of interest in the past years. Analytical solutions for the critical state in circular disks [1] and long strips [2], as well as numerical calculations for square films [3], have been reported. Nevertheless, when high T_c superconductors in the mixed state are investigated with conventional slow temporal response magnetization techniques, highly relaxed flux distribution may lead to wrong estimates of the critical state parameters. We have measured the short-time magnetic moment of (Y;Gd)$Ba_2Cu_3O_{7-\delta}$ epitaxial superconducting films with a non-conventional technique [4] with an overall response time of 10^{-5} s, six orders of magnitude below conventional techniques. The use of this technique may provide a way of avoiding the relaxation drawbacks.

Both virgin samples and magnetically cycled samples were examined, and the results are described within the framework of Bean's critical state model. We report the temperature dependence of the apparent critical current density measured 100 μs after having induced the critical state.

2. Experimental

Briefly, the magnetization measurements are performed as follows. First, a transverse pulsed magnetic field with a $\sim 1\,\mu$s rising edge is applied and then, after a delay time $t_d = 100\,\mu$s, a synchronized short laser pulse ($\sim$ 10 ns) is triggered producing a rapid optical heating of the sample to the normal state [5]. The metastable distribution of vortices at t_d completely relaxes (magnetic flux penetrates the sample) and the resulting flux variation is detected with a pick-up coil. The time integrated signal thus obtained is proportional to the magnetization at t_d, $M(t_d)$. A second laser pulse is shot to leave the sample in a clean state ($B = 0$) before performing the next measurement at a higher magnetic field. This is schematically indicated in Fig. 1a [zero field cooled configuration (ZFC)].

However, if the second laser pulse is not triggered, the sample is left in a field cooled state before removing the field (FCR) and, in the next laser shot, a cycled FCR-ZFC sample will be measured, as shown in Fig. 1b.

We investigated the low field magnetization of two c-axis oriented epitaxial $RBa_2Cu_3O_{7-\delta}$ films for magnetic field $\mathbf{H}_a$ perpendicular to the CuO_2 layers: a 0.5×0.7 cm^2, 300 nm thick $YBa_2Cu_3O_{7-\delta}$ film deposited on SrTiO by laser ablation of bulk targets [6]; and a 0.5×0.5 cm^2 film 300 nm thick $GdBa_2Cu_3O_{7-\delta}$ deposited on (100) MgO by magnetron DC sputtering [7]. Both films were characterized by AC susceptibility measurements, showing sharp transitions at T_c equal to 90.3 K and 88.5 K, respectively.

The films were attached to the sample holder of an optical cryostat. Two coaxial coils (primary and secondary) were fixed to the cryostat's cold finger, with their axis perpendicular to the film [4]. A Q-switched Nd:YAG laser provided 10 ns FWHM pulses at 532 nm. The spatial profile of the pulse is gaussian providing a uniform illumination of the sample.

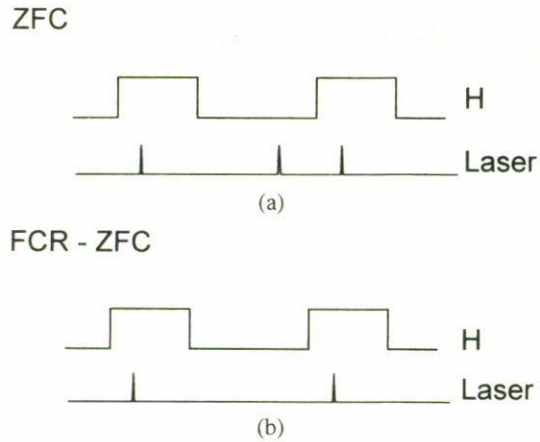

FIGURE 1. Schematic temporal sequence for magnetization measurements. Two laser pulses are shot for zero field cooled samples (ZFC). The magnetically cycled samples (FCR-ZFC) are measured with one laser pulse. (FCR stands for field cool reduced, see text).

The laser completely illuminated the film surface with normal incidence and a fluence of 2 mJ/cm^2. Magnetic moment was determined with an overall resolution of 10^{-3} e.m.u. which, for our set-up, is equivalent to a Hall probe with 0.1 Gauss resolution.

3. Results and discussion

The virgin magnetic moment of a circular disk in a transverse magnetic field (ZFC case) can be written as [1]:

$$M(x) = -\frac{8R^3}{3} H_a S(x)$$

$$S(x) = \frac{1}{2x}\left\{\arccos\left[\frac{1}{\cos h(x)}\right] + \frac{\sin h(x)}{\cos h^2(x)}\right\} \qquad (1)$$

where $x = H_a/H_d(T)$, $H_d(T) = j_c(T)d/2$ is a characteristic field, R the film radius and d its thickness.

This expression was used to fit the normalized time-integrated pick-up coil signal with $H_d(T)$ as the only fitting parameter. To the best of our knowledge, analytical results for the geometry of our films have not been reported.

The results for the YBCO film are shown in Fig. 2 (open symbols) as a function of $H/H_d(T)$ for different temperatures. They are normalized by their corresponding saturation values and plotted with the fitting curve (full line).

The experimental data for all temperatures follow the theoretical prediction for the transverse Bean model. This seems to imply that surface barriers [8] have a secondary effect when compared with bulk pinning and also that we are working in the single vortex pinning regime [9].

The magnetic moment of a FCR-ZFC circular disk, is given by the following expression [1]:

$$M(x) = -\frac{8R^3}{3} H_a[S(x) - S(x/2)], \qquad (2)$$

which was used to fit the normalized results (Fig. 2, full symbols) with $H_d(T)$ as the fitting parameter (full line). Again, results are well described by the model.

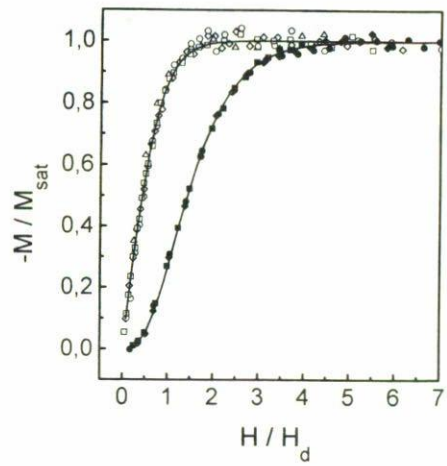

FIGURE 2. Normalized time-integrated pick-up coil signals for different temperatures as a function of $H/H_d(T)$, for $T = 81.5$, 83.5, 84.5, 85.5 and 86.5 K. The measurements were performed 100 μs after applying the magnetic field, for ZFC (open symbols) and FCR-ZFC (full symbols) samples. $H_d(T)$ was obtained by fitting these measurements to Eq. (1) and Eq. (2) respectively. The continuous line shows the normalized fit.

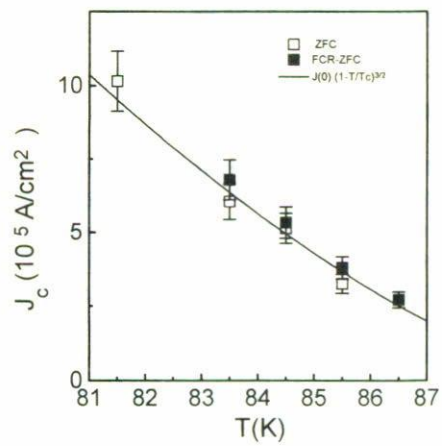

FIGURE 3. j_c *vs.* T obtained from the fitting parameter $H_d(T)$ for ZFC (open symbols) and FCR-ZFC (full symbols) samples. The continuous line is given by $j_c(0)(1 - T/T_c)^{3/2}$ ($T_c = 90.3$ K). The value of the critical current density at $T = 0$ K is estimated to be $j_c(0) = 3.2 \times 10^7$ A/cm^2.

It should be noted that although previous relaxation experiments in the same samples [4] have shown that the flux distribution induced by removing the magnetic field relaxes in about 20% before the next magnetic field pulse is applied ($\sim$ 1 s), calculations have shown that fitting our data to Eq. (2) underestimates the critical current density in approximately 10%. However, this effect could not be observed with our present data dispersion.

Figure 3 shows the temperature dependence of the critical current density obtained from $H_d(T)$ and the thickness of the film, $j_c(T) = 2H_d(T)/d$. Open (full) symbols correspond to the ZFC (FCR-ZFC) data. If we assume $j_c = j_c(0)(1 - T/T_c)^{3/2}$ as in Ref. 10 (full line), we obtain $j_c(0) = 3.2 \times 10^7$ A/cm^2 as an estimate of the critical current density at $T = 0$ K. Similar results were obtained for the GBCO film.

4. Conclusions

The low field dependence of the magnetization of high temperature (Y;Gd)$Ba_2Cu_3O_{7-\delta}$ superconducting films in transverse magnetic fields was reported. The critical state was induced in the μs time scale, and magnetic moment was measured at 100μs following the magnetic field rising edge. Films were examined in two different magnetic configurations, and results were satisfactorily described within Bean's critical state for a superconducting circular disk in a transverse magnetic field.

Acknowledgments

We are grateful to S.I. Krasnosvobodtsev for providing the YBCO film. This work was partially supported by Fundación Sauberán, EX018-UBA and EX285-UBA grants.

1. N. Mikheenko and Yu. E. Kuzovlev, *Physica C* **204** (1993) 229; J.R. Clem and A. Sanchez, *Phys. Rev. B* **50** (1994) 9355; A.V. Kuznetsov, A.A. Ivanov, and D.Y. Eremenko, *Phys. Rev. B* **52** (1995) 9637.
2. E.H. Brandt, M. Indenbom, and A. Forkl, *Europhys. Lett.* **22** (1993) 735; E.H. Brandt and M. Indenbom, *Phys. Rev. B* **48** (1993) 12893; E. Zeldov, J.R. Clem, M. McElfresh, and M. Darwin, *Phys. Rev. B* **49** (1994) 9802.
3. E.H. Brandt, *Phys. Rev. B* **52** (1995) 15442.
4. S.O. Valenzuela *et al.*, *Rev. Sci. Instrum.* **69** (1998) 251.
5. T. Puig *et al.*, *Phys. Rev. B* **46** (1992) 11240; D. Gupta, W.R. Donaldson, and A.M. Kadin, *J. Appl. Phys.* **78** (1995) 372.
6. A.I. Golovashkin *et al.*, *Physica C* **162–164** (1989) 715.
7. F. Pardo, G. Burmeister, and J. Guimpel, *Rev. Sci. Instrum.* **67** (1996) 2370.
8. C.B. Bean and J.D. Livingston, *Phys. Rev. Lett.* **12** (1964) 14; M. Konczykowski, L. Burlachkov, Y. Yeshurun, and F. Holtzberg, *Physica C* **194** (1992) 155.
9. G. Blatter *et al.*, *Rev. Mod. Phys.* **66** (1994) 1125.
10. M. Wurlitzer, M. Lorenz, K. Zimmer, and P. Ezquinazi, *Phys. Rev. B* **55** (1997) 11816, and references therein.